DIN41612 Half R Type Male

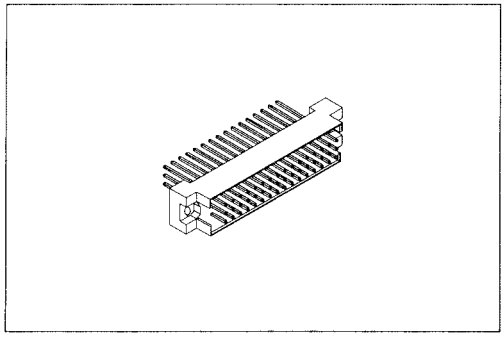

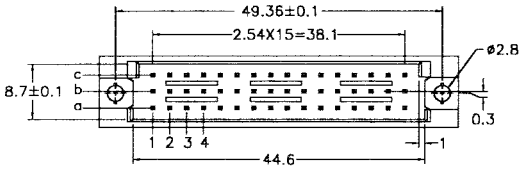

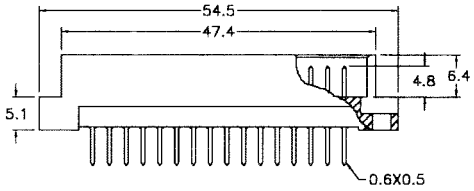

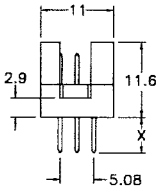

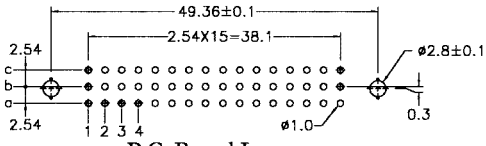

P.C. Board Layout

	X length	1	2	W1	W2
		4.0	2.5	13	17
Pitch	Position	Rows with Contacts		Contact Arrange	
2.54mm	48	a b c			
	32	a – c			
	16	a – –			
5.08mm	24	a b c			
	16	a – c			
	8	a – –			